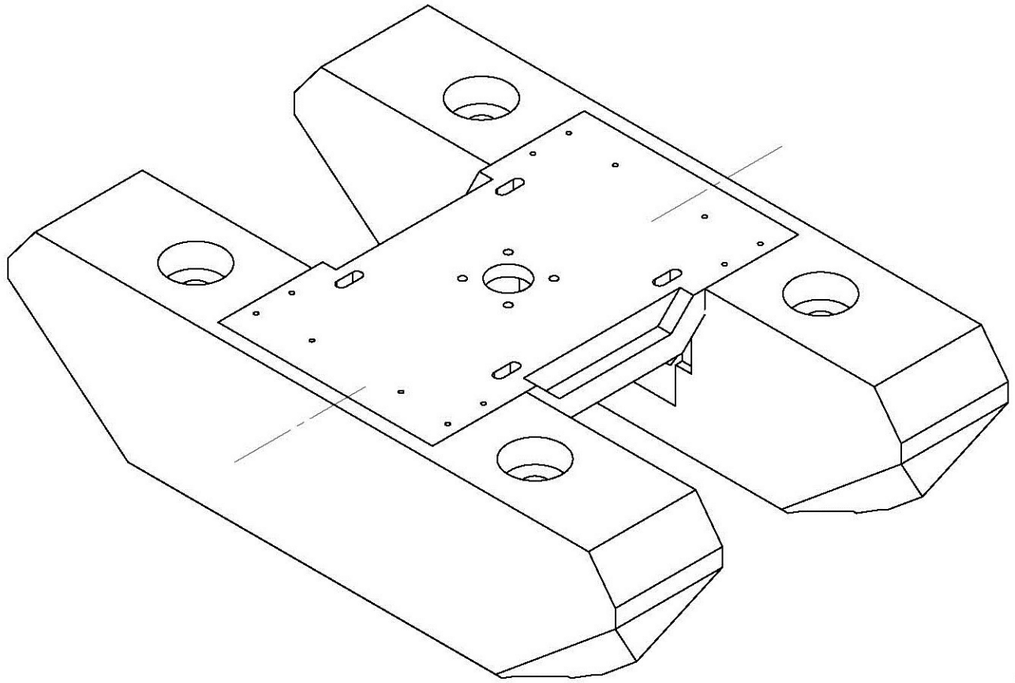

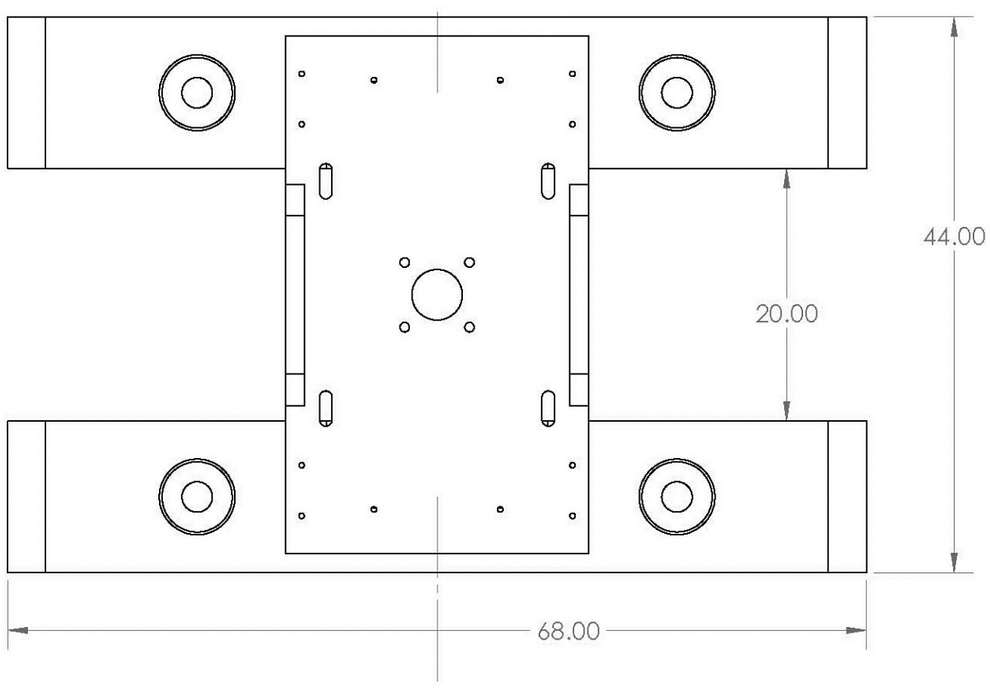
44.00
20.00
68.00

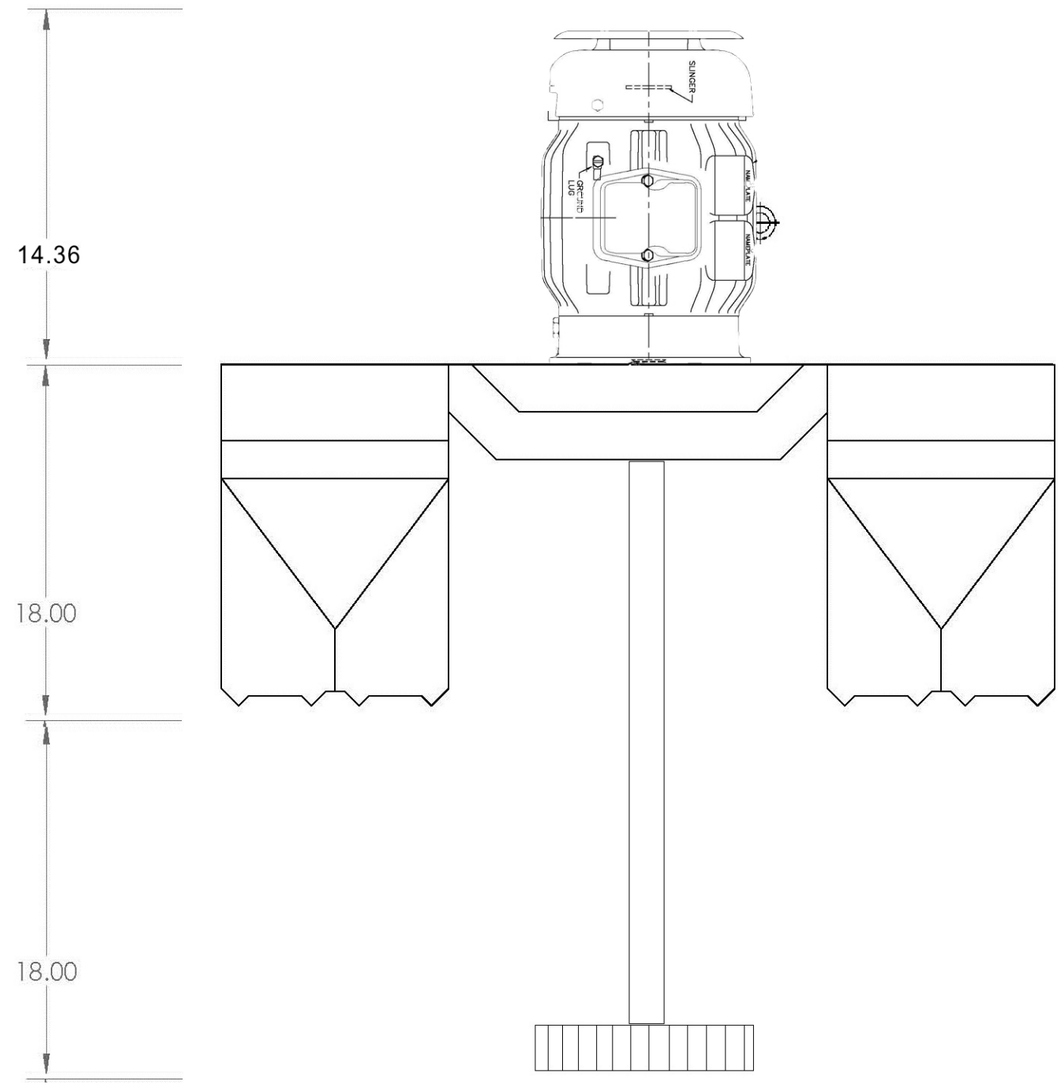
14.36
18.00
18.00
SLINGER
CAT-ATTIC LUG
PAL PLATE
MAIN PLATE